# E7 LED Desk Lamp

SKU: LTG001

## Specifications

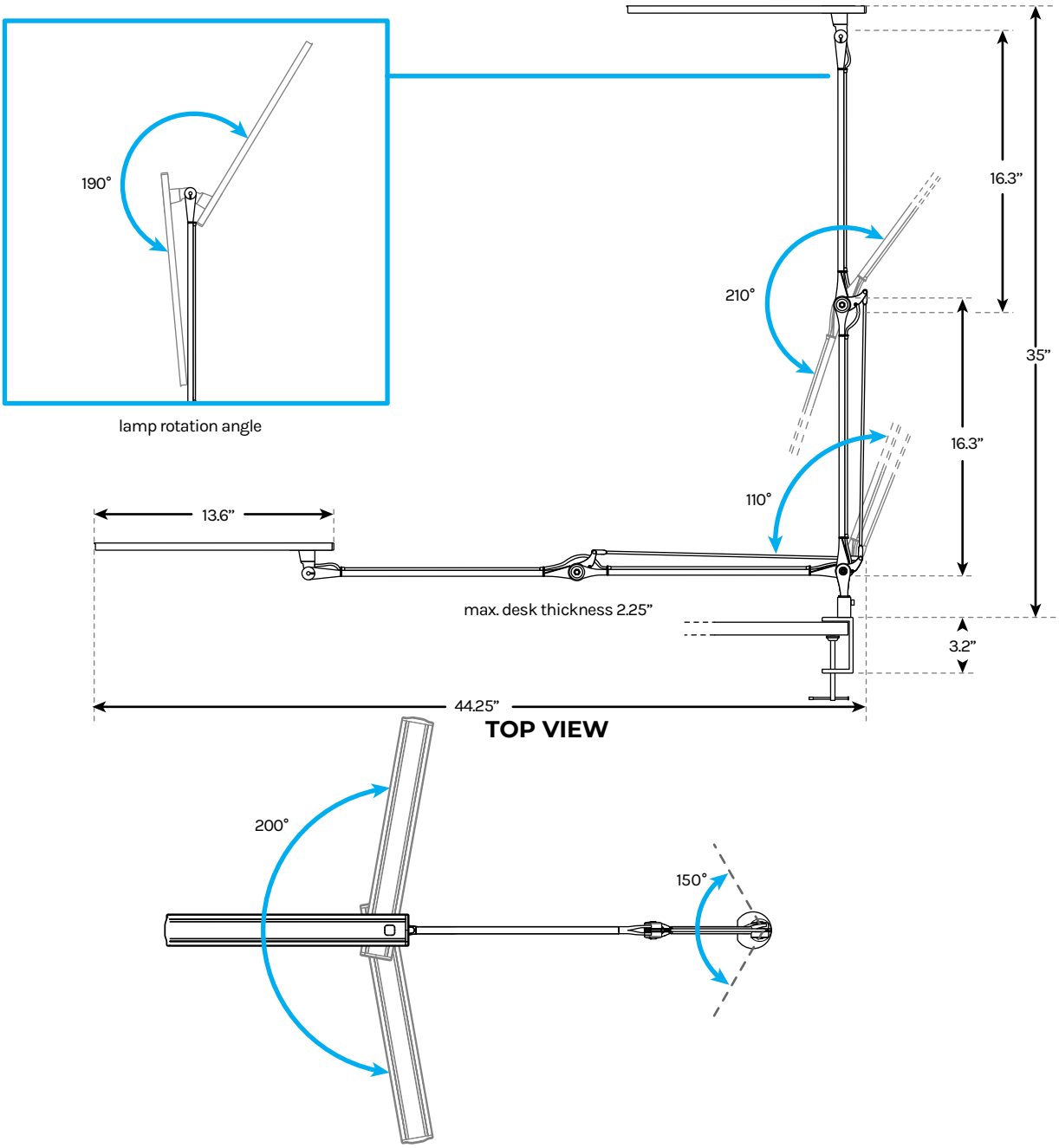


| | |
|---|---|
| **Light temperature** | warm 3000K, natural 4000K, cool 5000K |
| **Voltage** | 120 Vac |
| **Power** | 9W |
| **Color Render Index (CRI)** | 82 |
| **Lumens** | 685 Lm |
| **Color** | Black, Silver |
| **Warranty** | 15 years |

For help with assembly, find our assembly instructions at https://bit.ly/2K6qMEk

For technical questions and support call **800-349-3839**, email **info@upliftdesk.com**, or visit our chat service at **upliftdesk.com**